Scorpion *Nano* Dual H-bridge DC motor control

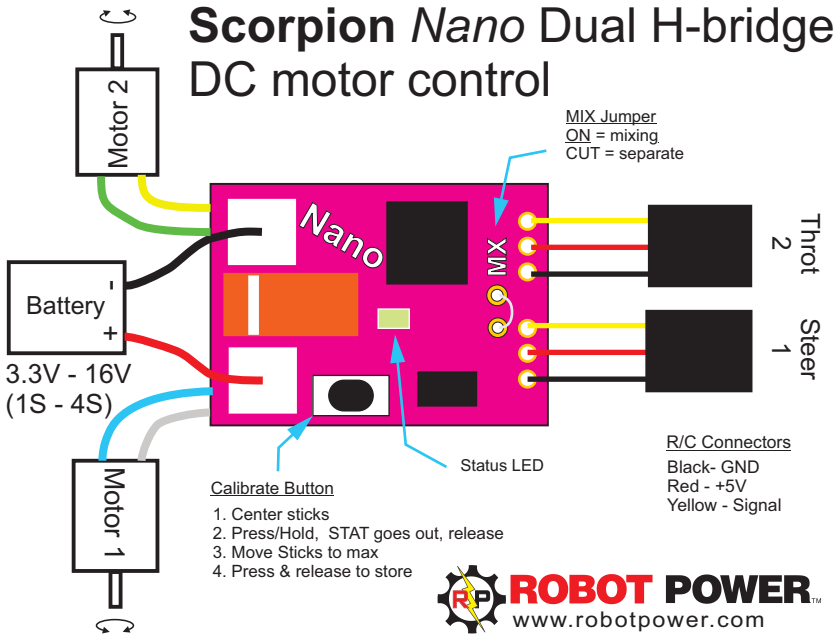

ROBOT POWER™
www.robotpower.com

Scorpion *Nano* Dual H-bridge DC motor control

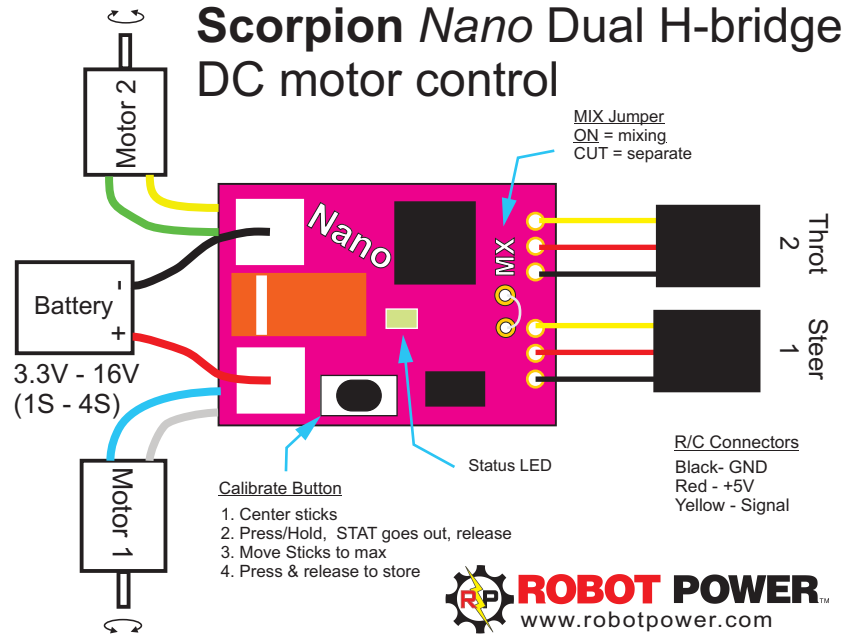

ROBOT POWER™
www.robotpower.com

Scorpion *Nano* Dual H-bridge DC motor control

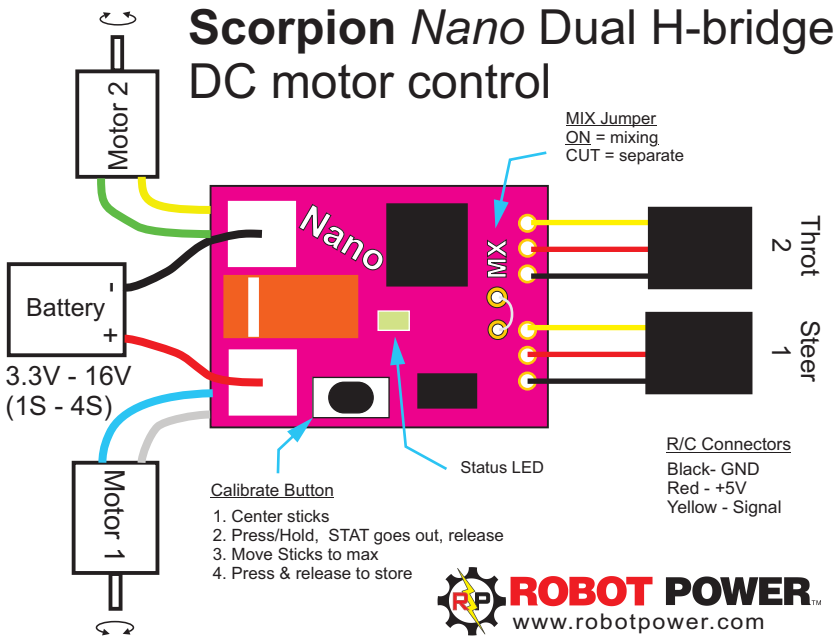

ROBOT POWER™
www.robotpower.com

Scorpion *Nano* Dual H-bridge DC motor control

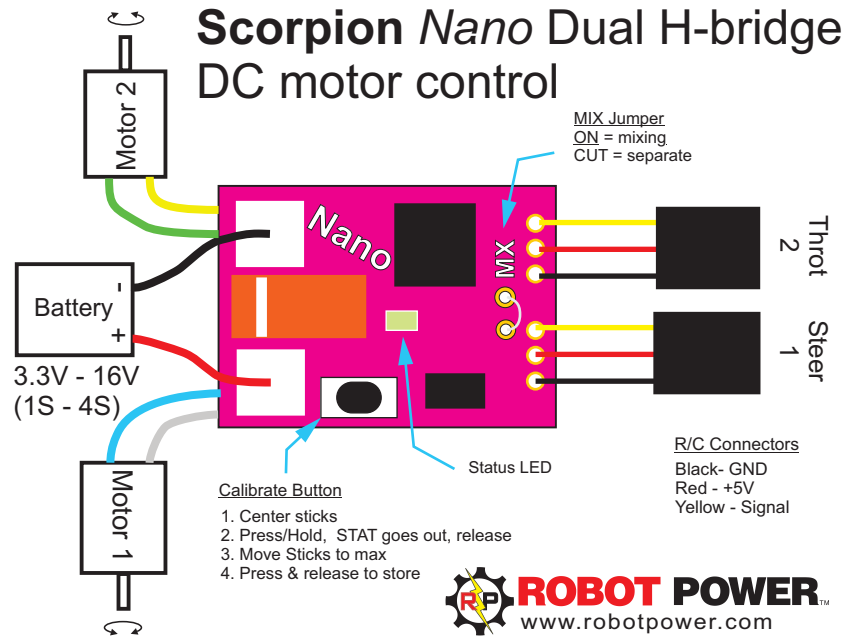

ROBOT POWER™
www.robotpower.com